HEAT PUMP

		AMBIPOWER® 280e		AMBIHEAT® HDC 270	AMBIPOWER® HDC 180
		Hardwired	Plug-in*		
Code		A551E280R5	551E280R3P	A55127005	A551180C5
Approx Storage Capacity	Litres	280	280	270	180
Height	mm	1832	1832	1825	1810
Width	mm	696	696	690	532
Depth	mm	725	725	720	576
Approx Weight empty	kg	135kg	135kg	135kg	116kg
Litres per hour at 19°C		56	56	77	60
TPR Valve Setting	kPa	1000	1000	1000	1000
Water Connections		RP ¾	RP ¾	RP ¾	RP ¾
Element Rating	kW	2.4	1.5	2.4	2.4
No of People		Up to 6	Up to 6	Up to 6	Up to 4
Installation Location		Outdoors	Outdoors	Outdoors	Outdoors
COP (at 19°C)		5.2	5.2	4.4	4.5

Temperature Zones	AMBIPOWER® 280e		AMBIHEAT® HDC 270	AMBIPOWER® HDC 180
	Hardwired	Plug-in*		
Model Code	A551E280R5	551E280R3P	A55127005	A551180C5
Outside Operating Temperature range for use	-6°C to +43°C	-6°C to +43°C	-5°C to +43°C	-7°C to +43°C
Can be installed in Zone	1 and 2	1 and 2	1 and 2	1 and 2

Zone 1 and 2 includes all areas of New Zealand.
*Plug-in model is supplied with a cord and 10A plug.

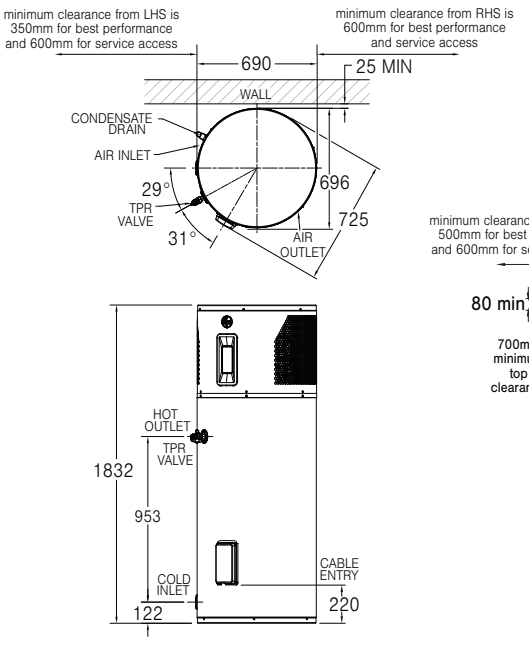

AmbiPower® 280e Dimensions

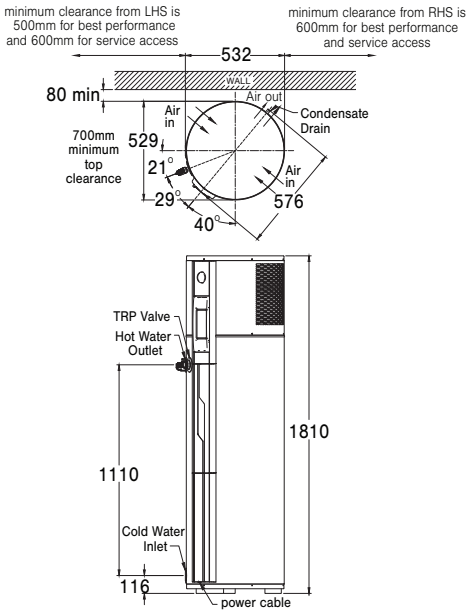

AmbiPower® HDC-180 Dimensions

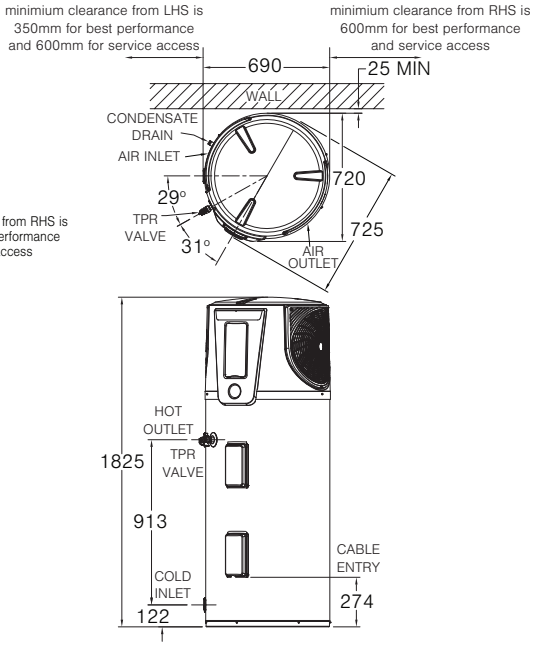

AmbiHeat® HDC-270 Dimensions